The product using material and processing must conform to the "WI-PZ-001"HSF technical standard control requirements

RoHS

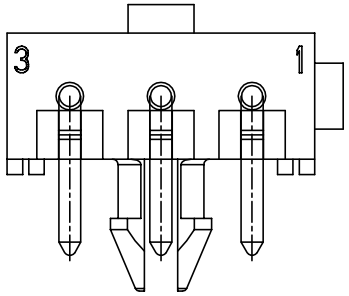

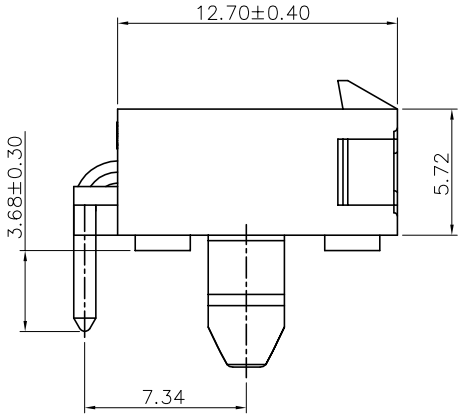

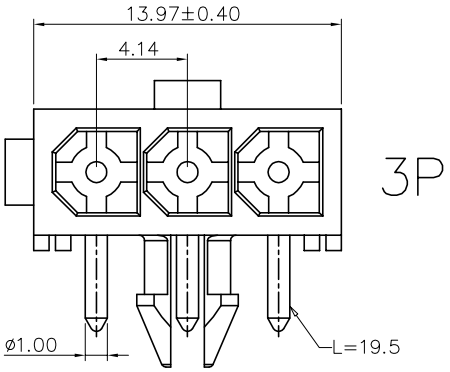

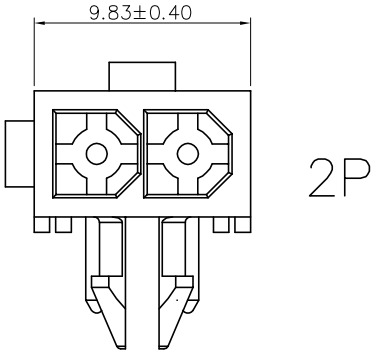

NOTE:
1.MATERIAL SPECIFICATION:
1-1.HOUSING: PA66
1-2.CONTACTS BRASS
2.PLATING SPECIFICATION:
2-1.CONTACTS:
TIN/GOLD FLASH PLATED OVER ALL.
3.ELECTRICAL PERFORMANCE:
3-1.CURRENT RATING: 7A
RATED VOLTAGE : 600V
3-2.CONTACT RESISTANCE: 20 mΩ MAX
3-3.INSULATION RESISTANCE: 1000MΩ Min
3-4.DIELECTRIC WITHSTANDING : 1500V AC
4.ENVIRONMENTAL PERFORMANCE:
4-1.OPERATING TEMPERATURE: -25°C~+85°C.
5.PACKAGE SPEC: PE BAG
6.P/N:

C4140 W 9-1 XX 1 X X X

- SERIES NO: C4140
- CONNECTOR: W-WAFER (W)
- ANGLE: 0-180° / 9-90° (9)
- ROW NO: 1-SINGLE ROW (1)
- PIN Q'PY: 02~03 (XX)
- TERMIPOINT: 1-DIP (1)
- PLATING: C-BRIGHT TIN (X)
- COLOR: A-BLACK / S-NATURE (X)
- HOUSING: 0-UL94V-0 (X)

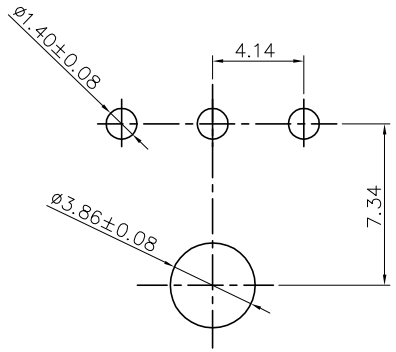

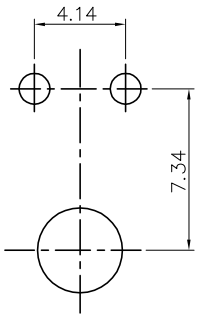

RECOMMENDED MOUNTING HOLE PATTERN
FOR 1.57 THICK P.C. BOARD

REV.	REVISION RECORD	DATE
A0	NEW RELEASE	21.11.17

UNIT: mm
SIZE: A4

GENERAL TOLERANCES	
LINEAR	ANGLES
0.0±0.35	X°REF±6°
0.00±0.25	X°±3°
0.000±0.10	X°X' ±2°

SCALE: 1:1	NAME	DATE
APPROVED	Wang_jr	21.11.17
DESIGNER	Han_Gao	21.11.17
DRAWN	Zijun_Huang	21.11.17

PART.NO: C4140W9-1XX1XXX

DWG.NO: ENDE05

TITLE: Pitch 4.14mm 单排 90° DIP Wafer 带定位柱

万连科技 WanLian Technology Co., Ltd

REV: A0 SHEET: 1/1