The product using material and processing must conform to the "WI-PZ-001"HSF technical standard control requirements

RoHS

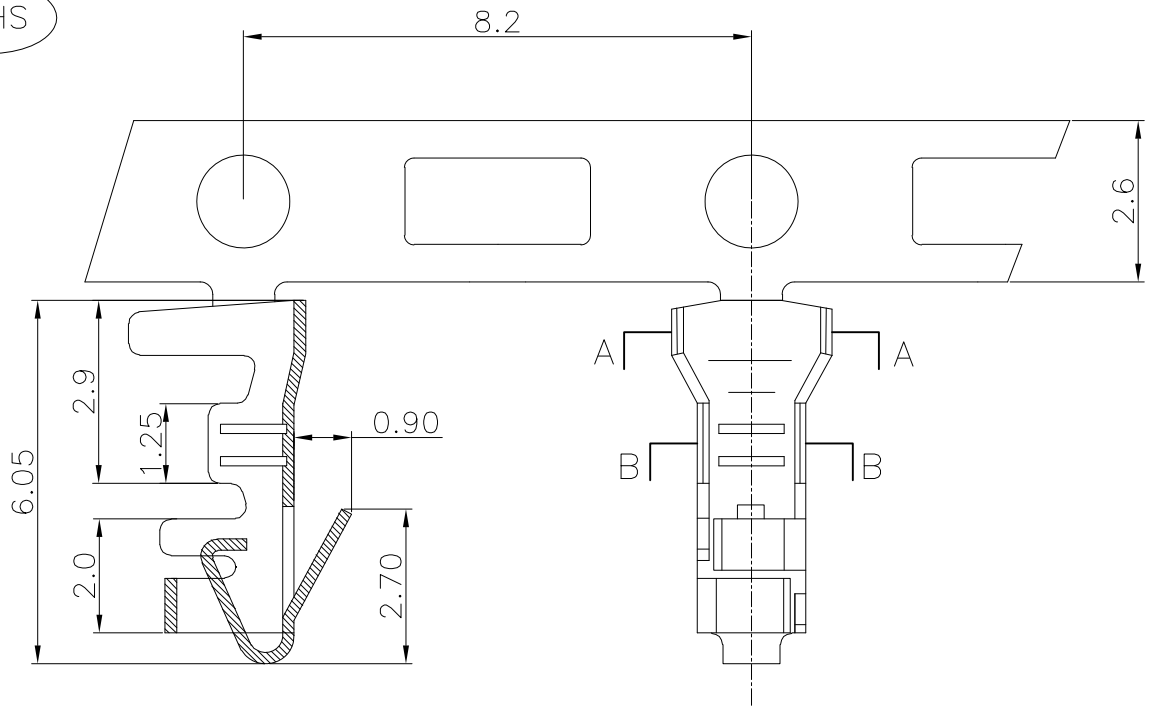

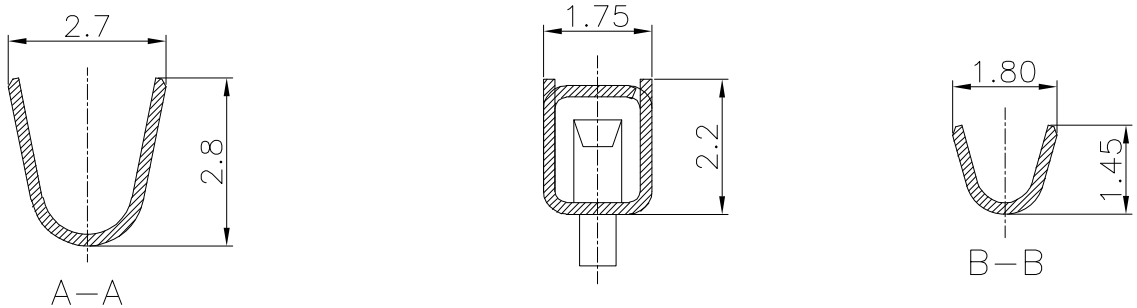

NOTE:
1.MATERIAL SPECIFICATION:
1-1.TERMINAL: PHOSPHOR BRONZE, AWG #26~#28
2.PLATING SPECIFICATION:
2-1.TERMINAL:SN PLATED OVER ALL.
3.MECHANICAL PERFORMANCE:
3-1.RETENTIVITY FORCE: 1.5KGF/PIN MIN
3-2.DURABILITY: 30 CYCLES.
4.ELECTRICAL PERFORMANCE:
4-1.CURRENT RATING: 3A
4-2.VOLTAGE RATING: 250V MAX
4-3.CONTACT RESISTANCE: 20mΩ Max.
4-4.INSULATION RESISTANCE: 1000MΩ MIN
4-5.WITHSTANDING VOLTAGE:1000V AC Min
5.OPERATING TEMPERATURE: -25°C~+85°C.
6.PACKAGE SPEC: REEL PACKING
7.P/N: A2509 T F X-X

SERIES NO: A2509
CONNECTOR: T
T-TERMINAL
MALE FEMALE: F
F-FEMALE
M-MALE
METAL: X
P-PHOSPHOR BRONZE
B-BRASS
PLATING: X
1-G/F
A-ALL AU G/F
C-BRIGHT TIN
D-MATTE TIN

REV.	REVISION RECORD	DATE
A0	NEW RELEASE	21.01.13

UNIT: mm
SIZE: A4

GENERAL TOLERANCES	
LINEAR	ANGLES
0.0±0.35	X°REF±6°
0.00±0.25	X°±3°
0.000±0.10	X°X' ±2°

SCALE: 1:1	NAME	DATE
APPROVED	Wang_jr	21.01.13
DESIGNER	Han_Gao	21.01.13
DRAWN	Zijun_Huang	21.01.13

PART.NO: A2509TFX-X

DWG.NO: ENDE05

TITLE: Pitch 2.50mm XH Terminal

万连科技 WanLian Technology Co., Ltd

REV: A0 SHEET: 1/1