The product using material and processing must conform to the "WI-PZ-142"HSF technical standard control requirements

RoHS+HF

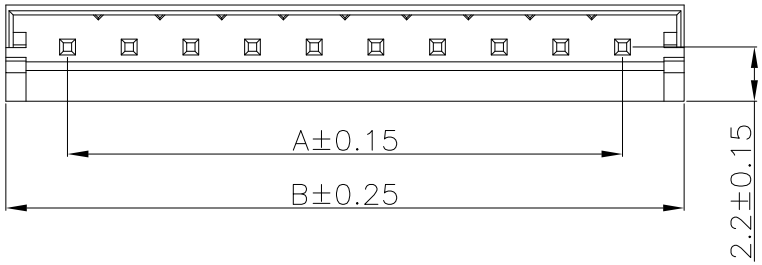

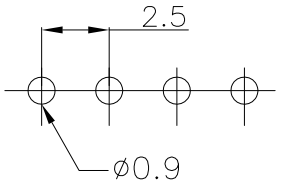

PCB Layout

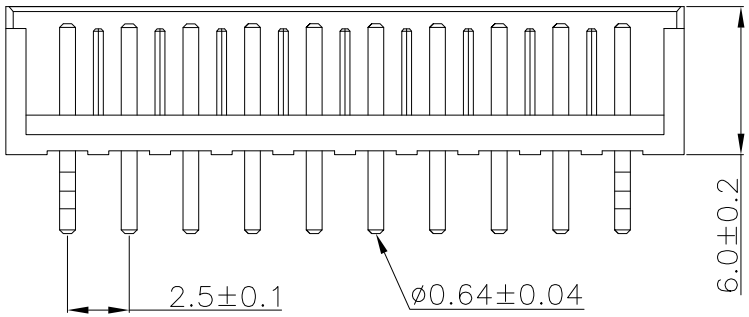

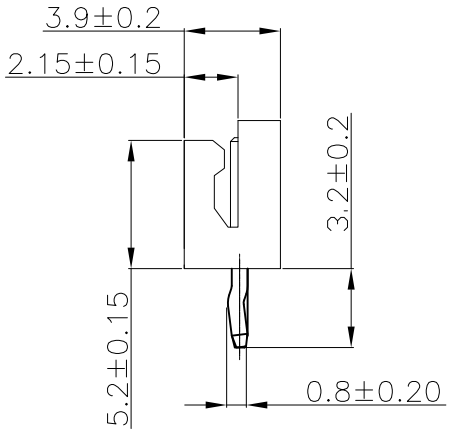

NOTE:
1.MATERIAL SPECIFICATION:
1-1.HOUSING:PA66 UL94V-0
1-2.CONTACTS:BRASS
2.PLATING SPECIFICATION:
2-1.CONTACTS: TIN/AU PLATED OVER ALL.
3.MECHANICAL PERFORMANCE:
3-1.RETENTIVITY FORCE: 1.5kgf/pin MIN
3-2.DURABILITY: 25 CYCLES.
4.ELECTRICAL PERFORMANCE:
4-1. RATED CURRENT : 3A AC,DC
RATED VOLTAGE : 250V AC/DC
4-2.INSULATION RESISTANCE: 1000MΩ MIN
CONTACT RESISTANCE : 10mΩ(MAX.)
4-3.WITHSTANDING VOLTAGE: 800V AC/minute
5.ENVIRONMENTAL PERFORMANCE:
OPERATING TEMPERATURE: -25°C~+85°C.
6.PACKAGE SPEC:PE BAG
A1 7.P/N: A2502 W 0-1 XX 1 X X X

SERIES NO:
CONNECTOR: W-WAFER
ANGLE: 0-180°
ROW NO: 1-SINGLE ROW
PIN Q'PY: 02~15
TERMIPOINT: 1-DIP
PLATING: A-ALL AU G/F, C-BRIGHT TIN, D-MATTE TIN
COLOUR: A-Black, K-White, G-BLUE
MATERIAL: 0-PA66, 1-PA66+15%

Ordering Information:

Circuit	Dimensions(mm) A	Dimensions(mm) B	Circuit	Dimensions(mm) A	Dimensions(mm) B
02	---	7.50	09	20.0	25.0
03	5.00	10.0	10	22.5	27.5
04	7.50	12.5	11	25.0	30.0
05	10.0	15.0	12	27.5	32.5
06	12.5	17.5	13	30.0	35.0
07	15.0	20.0	14	32.5	37.5
08	17.5	22.5	15	35.0	40.0

REV.	REVISION RECORD	DATE
A0	NEW RELEASE	21.01.13
A1	PART NUMBER RENEWAL	23.8.22

GENERAL TOLERANCES	
LINEAR	ANGLES
0.0±0.35	X° REF±6°
0.00±0.25	X° ±3°
0.000±0.10	X° X'±2°

UNIT: mm
SIZE: A4

SCALE: 1:1	NAME	DATE
APPROVED	Wang_jr	23.8.22
DESIGNER	Han_Gao	23.8.22
DRAWN	Zijun_Huang	23.8.22

PART NO: A2502W0-1XX1XXX

DWG NO: ENDE05

TITLE: 2.50mm PITCH EH180° WAFER TYPE

万连科技 WanLian Technology Co., Ltd

REV: A1

SHEET: 1/1