The product using material and processing must conform to the "WI-PZ-001"HSF technical standard control requirements

RoHS+HF

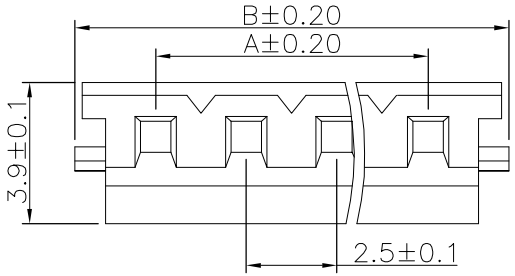

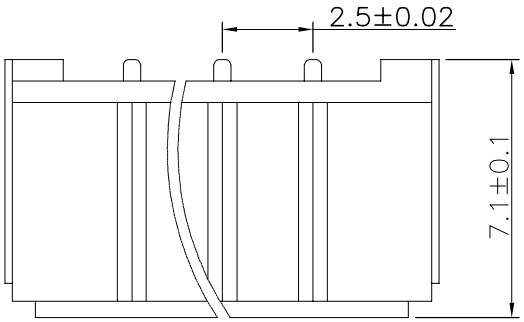

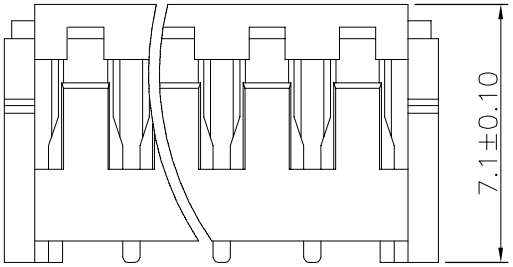

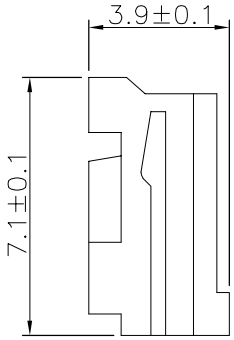

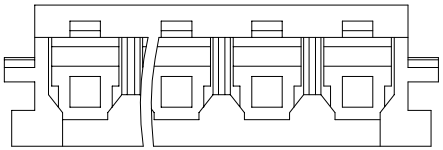

NOTE:
1.MATERIAL SPECIFICATION:
1-1.HOUSING: PA66,UL94V-0
2.MECHANICAL PERFORMANCE:
2-1.RETENTIVITY FORCE: 1.5kgf/PIN MIN
2-2.DURABILITY: 25 CYCLES.
3.ELECTRICAL PERFORMANCE:
3-1.CURRENT RATING: 3A
RATED VOLTAGE : 250V AC/DC
3-2.CONTACT RESISTANCE: 10 mΩ MAX
3-3.INSULATION RESISTANCE: 1000MΩ Min
3-4.DIELECTRIC WITHSTANDING : 800V
4.ENVIRONMENTAL PERFORMANCE:
4-1.OPERATING TEMPERATURE: -25°C~+85°C.
5.PACKAGE SPEC:PE BAG
6.P/N:

A2502 H M-1 XX X 0

- SERIES NO: A2502
- CONNECTOR: H-HOUSING — H
- MALE FEMALE: M-MALE — M
- ROW NO: 1-SINGLE ROW — 1
- PIN Q'PY: 02~16 — XX
- COLOR: A-BLACK, K-WHITE, S-NATURE — X

Ordering Information & Dimensions

Circuit	Dimensions(mm)		Circuit	Dimensions(mm)	
	A	B		A	B
02	2.50	7.00	10	22.50	27.00
03	5.00	9.50	11	25.00	29.50
04	7.50	12.00	12	27.50	32.00
05	10.00	14.50	13	30.00	34.50
06	12.50	17.00	14	32.50	37.00
07	15.00	19.50	15	35.00	39.50
08	17.50	22.00	16	37.50	42.00
09	20.00	24.50			

REV.	REVISION RECORD	DATE
A0	NEW RELEASE	21.10.12

UNIT: mm
SIZE: A4

GENERAL TOLERANCES	
LINEAR	ANGLES
0.0±0.35	X°REF±6°
0.00±0.25	X°±3°
0.000±0.10	X°X' ±2°

SCALE: 1:1	NAME	DATE
APPROVED	Wang_jr	21.10.12
DESIGNER	Han_Gao	21.10.12
DRAWN	Zijun_Huang	21.10.12

PART.NO: A2502HM-1XXX0

DWG.NO: ENDE05

TITLE: Pitch2.50 mm EH单排Housing

万连科技 WanLian Technology Co., Ltd

REV: A0

SHEET: 1/1