The product using material and processing must conform to the "WI-PZ-001"HSF technical standard control requirements

RoHS

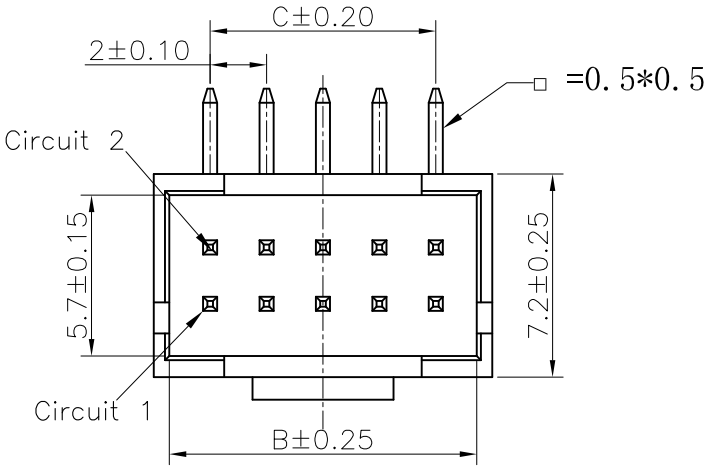

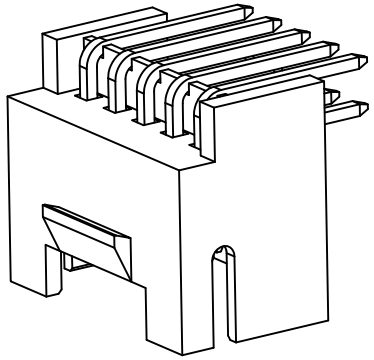

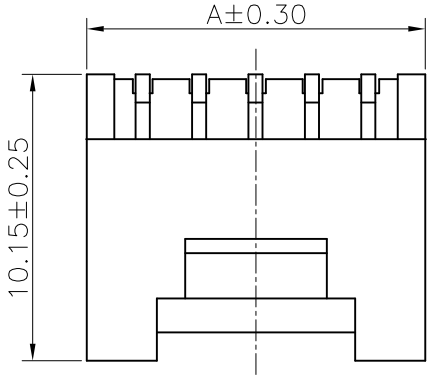

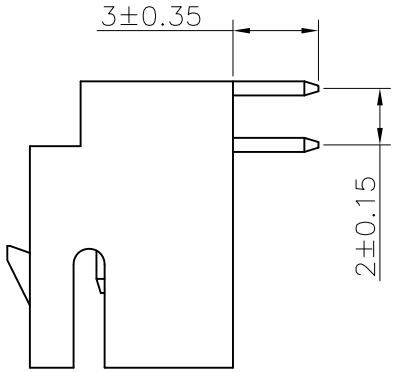

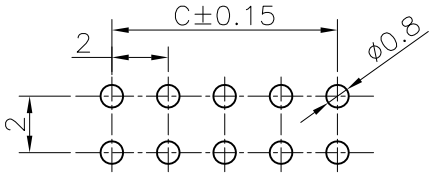

PCB Layout

NOTE:
1.MATERIAL SPECIFICATION:
1-1.HOUSING: PA46, 94V-0
1-2.CONTACTS: BRASS
2.PLATING SPECIFICATION:
2-1.CONTACTS:
SN PLATED OVER ALL.
3.MECHANICAL PERFORMANCE:
3-1.RETENTIVITY FORCE: 1.0KGF/PIN MIN
3-2.DURABILITY: 50 CYCLES.
4.ELECTRICAL PERFORMANCE:
4-1.CURRENT RATING: 3.0A
4-2.VOLTAGE RATING: 250V MAX
4-3.CONTACT RESISTANCE: 30mΩ Max.
4-4.INSULATION RESISTANCE: 1000MΩ MIN
4-5.DIELECTRIC WITHSTANDING VOLTAGE: 1000V AC Min
5.ENVIRONMENTAL PERFORMANCE:
OPERATING TEMPERATURE: -25°C~+85°C.
6.PACKAGE SPEC:PE BAG
7.P/N ORDER:
A1

A2009 W 9-2 XX 1 X X 0

SERIES NO:
CONNECTOR:
W-WAFER
ANGLE:
9-90°
ROW NO:
2-DOUBLE ROW
PIN Q'PY:
04~40
COLOR:
A-BLACK
K-WHITE
S-NATURE
PLATING:
A-ALL AU G/F
C-BRIGHT TIN
D-MATTE Tin
TERMIPOINT:
1-DIP

Circuit	Dimensions(mm)			Circuit	Dimensions(mm)		
	A	B	C		A	B	C
2*02	6.00	4.90	2.00	2*12	26.00	24.90	22.00
2*03	8.00	6.90	4.00	2*13	28.00	26.90	24.00
2*04	10.00	8.90	6.00	2*14	30.00	28.90	26.00
2*05	12.00	10.90	8.00	2*15	32.00	30.90	28.00
2*06	14.00	12.90	10.00	2*16	34.00	32.90	30.00
2*07	16.00	14.90	12.00	2*17	36.00	34.90	32.00
2*08	18.00	16.90	14.00	2*18	38.00	36.90	34.00
2*09	20.00	18.90	16.00	2*19	40.00	38.90	36.00
2*10	22.00	20.90	18.00	2*20	42.00	40.90	38.00
2*11	24.00	22.90	20.00				

REV.	REVISION RECORD	DATE
A0	NEW RELEASE	21.01.13
A1	PART NUMBER RENEWAL	23.9.12

UNIT: mm
SIZE: A4

GENERAL TOLERANCES	
LINEAR	ANGLES
0.0±0.35	X°REF±6°
0.00±0.25	X°±3°
0.000±0.10	X°X' ±2°

SCALE: 1:1	NAME	DATE
APPROVED	Wang_jr	23.9.12
DESIGNER	Han_Gao	23.9.12
DRAWN	Zijun_Huang	23.9.12

PART.NO: A2009W9-2XX1XX0

DWG.NO: ENDE05

TITLE: PITCH 2.0MM 90° PHB WAFER

万连科技 WanLian Technology Co., Ltd

REV: A1

SHEET: 1/1