The product using material and processing must conform to the "WI-PZ-001"HSF technical standard control requirements

RoHS+HF

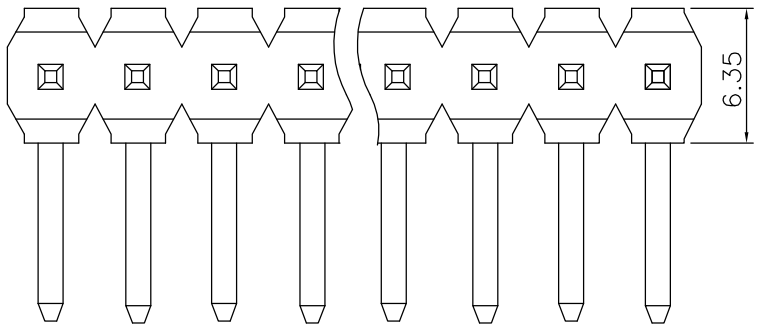

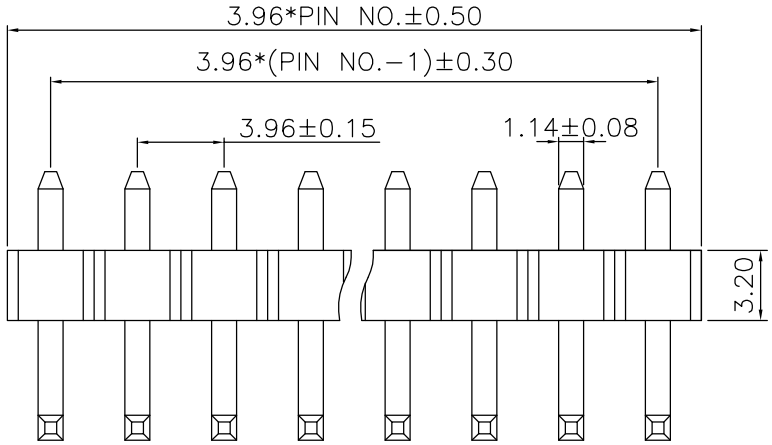

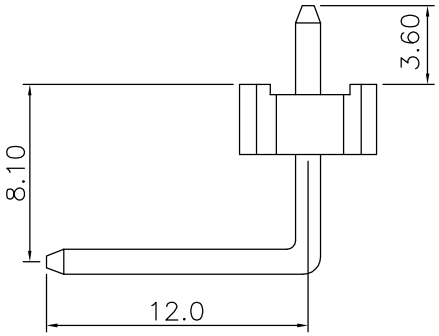

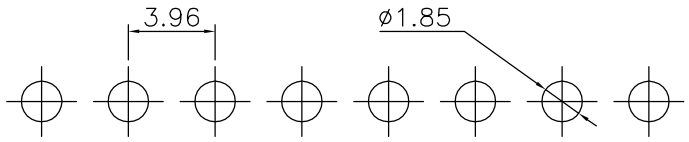

RECOMMENDED PCB LAYOUT

NOTE:
1.MATERIAL SPECIFICATION:
  1-1.HOUSING: LCP BK UL94V-0
  1-2.CONTACTS: BRASS
2.PLATING SPECIFICATION:
  G/F PLATED OVER ALL.
3.ELECTRICAL PERFORMANCE:
  3-1.CURRENT RATING: 7.0A
  3-2.VOLTAGE RATING: 250V MAX
  3-3.CONTACT RESISTANCE: 20mΩ Max.
  3-4.INSULATION RESISTANCE: 1000MΩ MIN
  3-5.DIELECTRIC WITHSTANDING VOLTAGE: 800V AC Min
4.ENVIRONMENTAL PERFORMANCE:
  OPERATING TEMPERATURE: -40°C~+105°C.
5.PACKAGE SPEC：PE BAG
6.P/N ORDER:

PH3961 32 M 9-1 XX 1 X X X 01

- SERIES NO: PH3961
- HEIGHT: 32: 3.2mm
- MALE FEMALE: M-MALE
- ANGLE: 0-90°
- ROW NO: 1-SINGLE ROW
- PIN Q'PY: 02~10
- TERMIPOINT: 1-DIP
- PLATING: A-ALL AU G/F, C-BRIGHT TIN, D-MATTE TIN
- COLOR: A-BLACK
- HOUSING: 1-LCP

REV.	REVISION RECORD	DATE
A0	NEW RELEASE	21.01.13

UNIT: mm
SIZE: A4

GENERAL TOLERANCES	
LINEAR	ANGLES
0.0±0.35	X°REF±6°
0.00±0.25	X°±3°
0.000±0.10	X°X' ±2°

SCALE: 1:1	NAME	DATE
APPROVED	Wang_jr	21.01.13
DESIGNER	Han_Gao	21.01.13
DRAWN	Zijun_Huang	21.01.13

PART.NO: PH396132M9-1XX1XXX01

DWG.NO: ENDE05

TITLE: PITCH 3.96MM 90 ° VS SINGLE ROW DIP PIN HEADER

万连科技 WanLian Technology Co., Ltd

REV: A0

SHEET: 1/1