The product using material and processing must conform to the "WI-PZ-001"HSF technical standard control requirements

ROHS

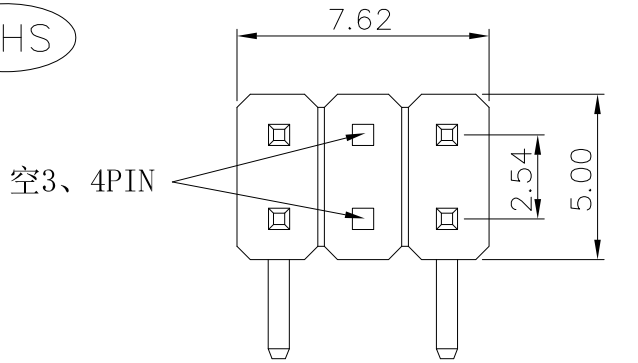

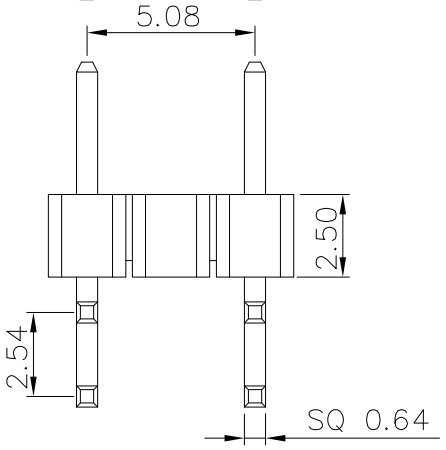

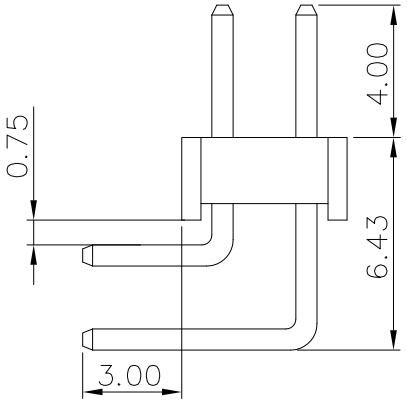

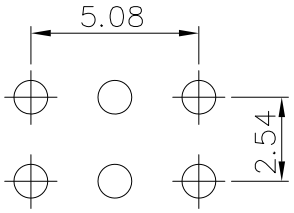

RECOMMEND P.C.B LAYOUT

NOTE:
1.MATERIAL SPECIFICATION:
1-1.HOUSING: UL94V-0
1-2.CONTACTS: BRASS
2.PLATING SPECIFICATION:
2-1.CONTACTS:
GOLD FLASH OVER NICKEL
3.MECHANICAL PERFORMANCE:
3-1.RETENTIVITY FORCE: 0.5kgf/PIN MIN
3-2.DURABILITY: 100 CYCLES.
3.ELECTRICAL PERFORMANCE:
3-1.CURRENT RATING: 3A
RATED VOLTAGE : 500V AC/DC
3-2.CONTACT RESISTANCE: 30 mΩ MAX
3-3.INSULATION RESISTANCE: 1000MΩ Min
3-4.DIELECTRIC WITHSTANDING : 500V
4.ENVIRONMENTAL PERFORMANCE:
4-1.OPERATING TEMPERATURE: -40°C~+105°C.
5.PACKAGE SPEC: PE BAG
6.P/N:

PH2541 25 M 9-2 XX 1 X X X 10

- SERIES NO: PH2541
- HEIGHT: 25: 2.5mm
- MALE FEMALE: M-MALE
- ANGLE: 9-90°
- ROW NO: 2-DOUBLE ROW
- PIN Q'PY: 06
- TERMIPOINT: 1-DIP
- PLATING: A-ALL AU G/F
- COLOR: A-BLACK
- HOUSING: 1-PA6T

REV.	REVISION RECORD	DATE
A0	NEW RELEASE	22.10.15

UNIT: mm
SIZE: A4

GENERAL TOLERANCES	
LINEAR	ANGLES
0.0±0.35	X°REF±6°
0.00±0.25	X°±3°
0.000±0.10	X°X' ±2°

SCALE: 1:1	NAME	DATE
APPROVED	Wang_jr	22.10.15
DESIGNER	Gao_Han	22.10.15
DRAWN	LX_HOU	22.10.15

PART.NO: PH254125M9-2XX1XXX10

DWG.NO: ENDE05

TITLE: Pitch 2.54mm 90° 双排针弯凹槽空第 3、4P H2.5W5.0 DIP PA3.0 PC3.0

万连科技 WanLian Technology Co., Ltd

REV: A0 SHEET: 1/1