The product using material and processing must conform to the "WL-PZ-001"HSF technical standard control requirements

RoHS

| pin位 | 2pin | 3pin4改3 | 4pin | 5pin正方形 | 6pin | 7pin | 8pin |
|---|---|---|---|---|---|---|---|
| A-CODE 图形 | | | | | | | |
| B-CODE 图形 | | | | | | | |
| D-CODE 图形 | | | | | | | |

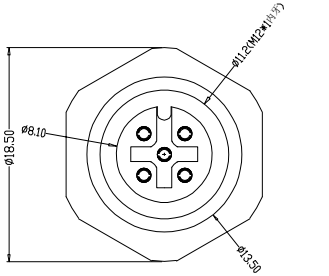


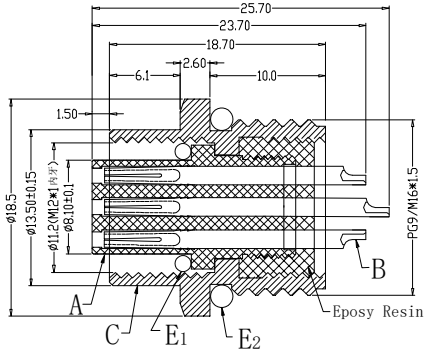


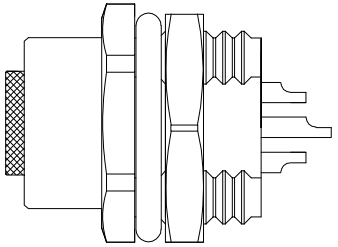

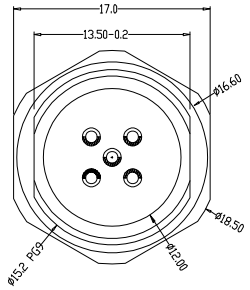


组合图

Recommended Panel Cut-out

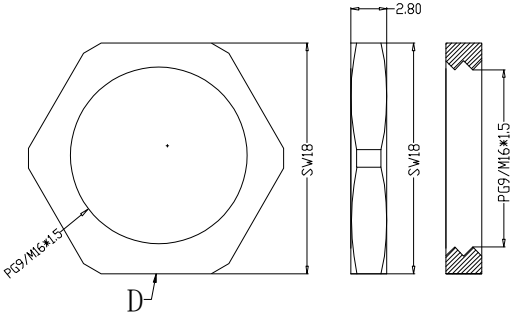


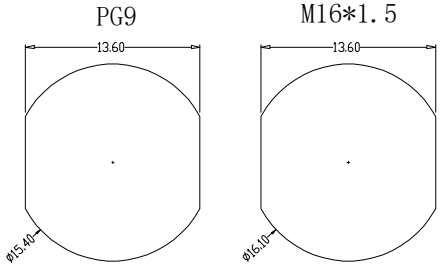


| P/N | TITLE |
|---|---|
| M12A02-04-303-M16 | M12防水 A-CODE 2P线端母头 后锁面板PG9/M16 SW17T |
| M12A03-04-303-M16 | M12防水 A-CODE 3P线端母头 后锁面板PG9/M16 SW17T |
| M12A04-04-303-M16 | M12防水 A-CODE 4P线端母头 后锁面板PG9/M16 SW17T |
| M12A05-04-303-M16 | M12防水 A-CODE 5P线端母头 后锁面板PG9/M16 SW17T |
| M12A06-04-303-M16 | M12防水 A-CODE 6P线端母头 后锁面板PG9/M16 SW17T |
| M12A07-04-303-M16 | M12防水 A-CODE 7P线端母头 后锁面板PG9/M16 SW17T |
| M12A08-04-303-M16 | M12防水 A-CODE 8P线端母头 后锁面板PG9/M16 SW17T |
| M12B02-04-303-M16 | M12防水 B-CODE 2P线端母头 后锁面板PG9/M16 SW17T |
| M12B03-04-303-M16 | M12防水 B-CODE 3P线端母头 后锁面板PG9/M16 SW17T |
| M12B04-04-303-M16 | M12防水 B-CODE 4P线端母头 后锁面板PG9/M16 SW17T |
| M12B05-04-303-M16 | M12防水 B-CODE 5P线端母头 后锁面板PG9/M16 SW17T |
| M12D02-04-303-M16 | M12防水 D-CODE 2P线端母头 后锁面板PG9/M16 SW17T |
| M12D03-04-303-M16 | M12防水 D-CODE 3P线端母头 后锁面板PG9/M16 SW17T |
| M12D04-04-303-M16 | M12防水 D-CODE 4P线端母头 后锁面板PG9/M16 SW17T |

| | | | |
|---|---|---|---|
| Engagemenr firce | ≤50N | Rated volage | 2-5pin:60v<br>6-8PIN:30V |
| Disengagement force | ≥5N | Rated current | 2-5pin:4A<br>6-8PIN:2A |
| Mechanical lifespan | ≥500 | Insulation resisrance | ≥1000MΩ |
| IP rating | IP67/IP68 | Conract resistangce | ≤10MΩ |
| Flammability | UL94 V-0 | Operation Temperature | -40° C~105° C |

| | PARTS | MARERIALS | TREATMENT | AMOUNT |
|---|---|---|---|---|
| A | HOUSING | PA66+GF | SPECIFY COLOR | 1 |
| B | CONTACT | BRASS | GOLD PLATED | 2~8 |
| C | OUTER CONTACT | BRASS | NICKL PLATED | 1 |
| D | NUT | BRASS | NICKL PLATED | 1 |
| E | O-RING | EPDM | SPECIFY COLOR | 2 |

| REV. | REVISION RECORD | DATE |
|---|---|---|
| A0 | NEW RELEASE | 21.11.17 |

UNIT: mm

SIZE: A4

| GENERAL TOLERANCES | |
|---|---|
| LINEAR | ANGLES |
| 0.0±0.35 | X°REF±6° |
| 0.00±0.25 | X°±3° |
| 0.000±0.10 | X°X' ±2° |

| SCALE: 1:1 | NAME | DATE |
|---|---|---|
| APPROVED | | |
| DESIGNER | | |
| DRAWN | | |

PART.NO: M12XXX-04-303-M16

DWG.NO: ENDE05

TITLE: M12防水 2~8P线端母头 后锁面板PG9/M16 SW17T

万连科技 WanLian Technology Co., Ltd

REV: A0

SHEET: 1/1