The product using material and processing must conform to the "WL-PZ-001"HSF technical standard control requirements

RoHS

PIN位	2pin	3pin	4pin	5pin	6pin	7pin	8pin
X 值	1.00	1.00	1.00	1.00	0.80	0.80	0.80
A-CODE 图形							
B-CODE 图形							
D-CODE 图形							

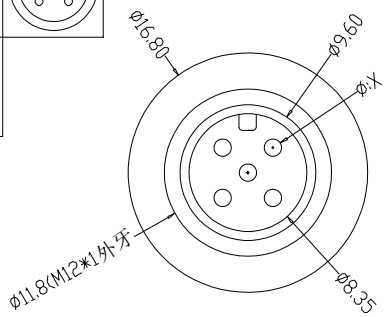

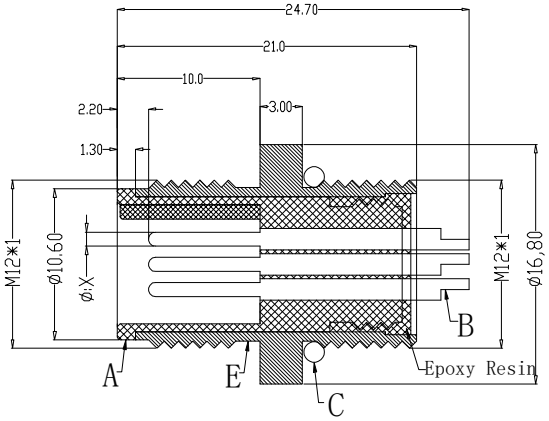

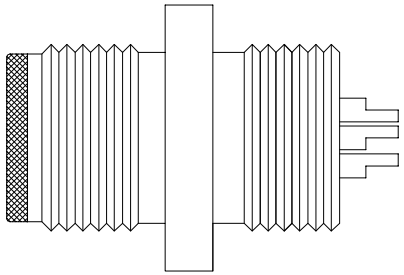

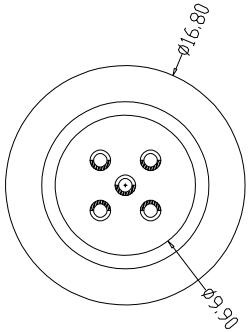

Recommended Panel Cut-out

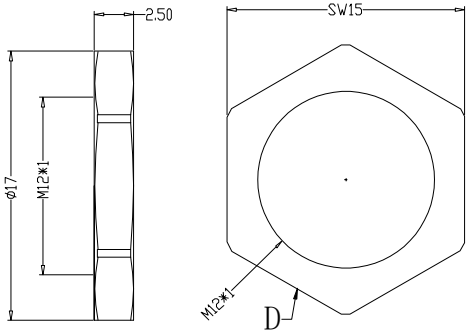

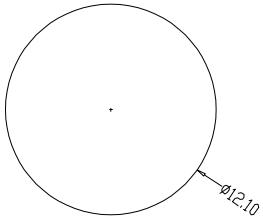

P/N	TITLE
M12A02-03-116	M12防水 A-CODE 2P线端公头 后锁面板式M12 F16.8T
M12A03-03-116	M12防水 A-CODE 3P线端公头 后锁面板式M12 F16.8T
M12A04-03-116	M12防水 A-CODE 4P线端公头 后锁面板式M12 F16.8T
M12A05-03-116	M12防水 A-CODE 5P线端公头 后锁面板式M12 F16.8T
M12A06-03-116	M12防水 A-CODE 6P线端公头 后锁面板式M12 F16.8T
M12A07-03-116	M12防水 A-CODE 7P线端公头 后锁面板式M12 F16.8T
M12A08-03-116	M12防水 A-CODE 8P线端公头 后锁面板式M12 F16.8T
M12B02-03-116	M12防水 B-CODE 2P线端公头 后锁面板式M12 F16.8T
M12B03-03-116	M12防水 B-CODE 3P线端公头 后锁面板式M12 F16.8T
M12B04-03-116	M12防水 B-CODE 4P线端公头 后锁面板式M12 F16.8T
M12B05-03-116	M12防水 B-CODE 5P线端公头 后锁面板式M12 F16.8T
M12D02-03-116	M12防水 D-CODE 2P线端公头 后锁面板式M12 F16.8T
M12D03-03-116	M12防水 D-CODE 3P线端公头 后锁面板式M12 F16.8T
M12D04-03-116	M12防水 D-CODE 4P线端公头 后锁面板式M12 F16.8T

Engagemenr firce	≤50N	Rated volage	2-5pin:60v 6-8PIN:30V
Disengagement force	≥5N	Rated current	2-5pin:4A 6-8PIN:2A
Mechanical lifespan	≥500	Insulation resisrance	≥1000MΩ
IP rating	IP67/IP68	Conract resistangce	≤10MΩ
Flammability	UL94 V-0	Operation Temperature	-40° C~105° C

	PARTS	MARERIALS	TREATMENT	AMOUNT
A	HOUSING	PA66+GF	SPECIFY COLOR	1
B	CONTACT	BRASS	GOLD PLATED	2~8
C	OUTER CONTACT	BRASS	NICKL PLATED	1
D	NUT	BRASS	NICKL PLATED	1
E	O-RING	EPDM	BLACK	1

REV.	REVISION RECORD	DATE
A0	NEW RELEASE	21.11.17

UNIT: mm
SIZE: A4

GENERAL TOLERANCES	
LINEAR	ANGLES
0.0±0.35	X°REF±6°
0.00±0.25	X°±3°
0.000±0.10	X°X' ±2°

SCALE: 1:1	NAME	DATE
APPROVED		
DESIGNER		
DRAWN		

PART.NO: M12XXX-03-116

DWG.NO: ENDE05

TITLE: M12防水 2~8P线端公头 后锁面板式M12 F16.8T

万连科技 WanLian Technology Co., Ltd

REV: A0

SHEET: 1/1