The product using material and processing must conform to the "WL-PZ-001"HSF technical standard control requirements

PIN位	3pin	4pin	5pin
图形	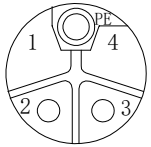	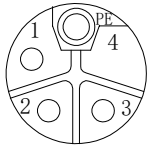	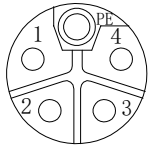

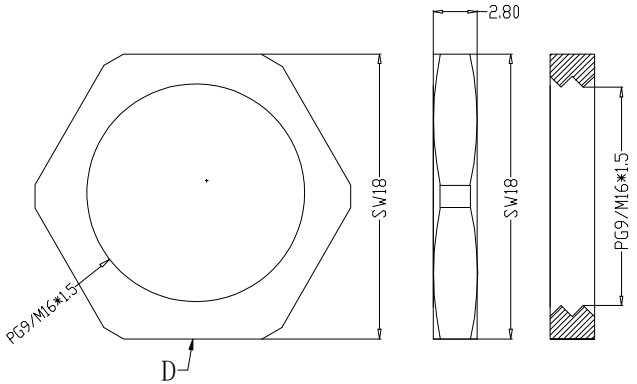

Recommended Panel Cut-out

RoHS

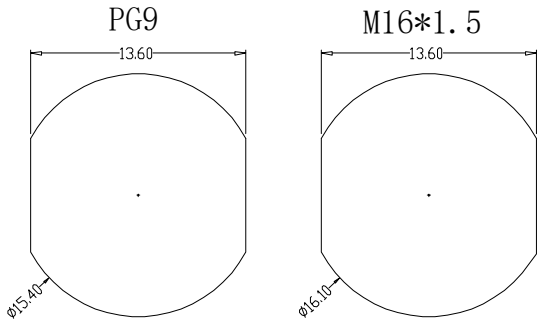

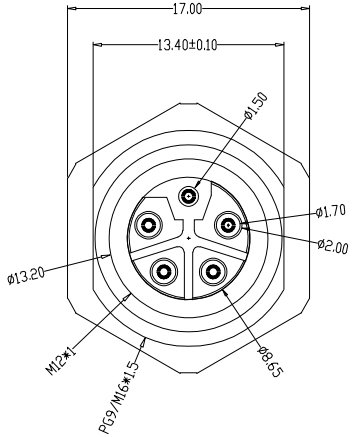

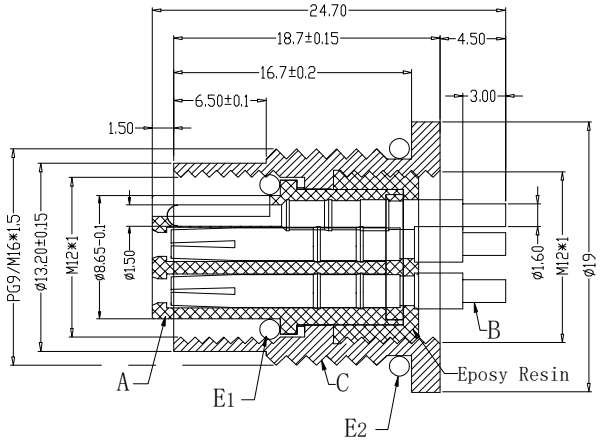

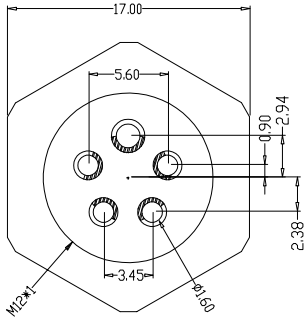

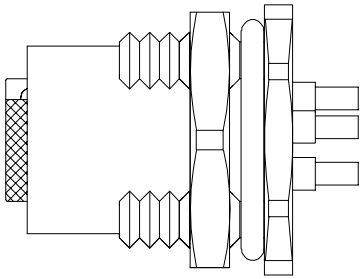

组合图

Engagemenr firce	≤50N	Rated volage	63v
Disengagement force	≥10N	Rated current	16A
Mechanical lifespan	≥500	Insulation resisrance	≥1000MΩ
IP rating	IP67	Conract resistangce	≤10MΩ
Flammability	UL94 V-0	Operation Temperature	-40° C~105° C

	PARTS	MARERIALS	TREATMENT	AMOUNT
A	HOUSING	PA66+GF	SPECIFY COLOR	1
B	CONTACT	BRASS	GOLD PLATED	3~5
C	OUTER CONTACT	BRASS	NICKL PLATED	1
D	NUT	BRASS	NICKL PLATED	1
E	O-RING	EPDM	BLACK	1

REV.	REVISION RECORD	DATE
A0	NEW RELEASE	21.11.17

UNIT: mm

SIZE: A4

GENERAL TOLERANCES	
LINEAR	ANGLES
0.0±0.35	X°REF±6°
0.00±0.25	X°±3°
0.000±0.10	X°X' ±2°

SCALE: 1:1

	NAME	DATE
APPROVED		
DESIGNER		
DRAWN		

PART.NO: M12LXX-04-081

DWG.NO: ENDE05

TITLE: M12前锁面板 L编码 母头 PCB式 开孔M16.PG9 SW17T-24.7L

万连科技 WanLian Technology Co., Ltd

REV: A0

SHEET: 1/1