The product using material and processing must conform to the "WL-PZ-001"HSF technical standard control requirements

RoHS

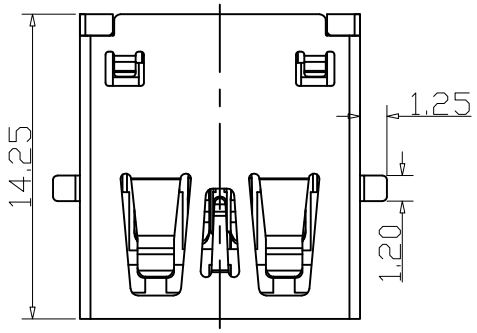

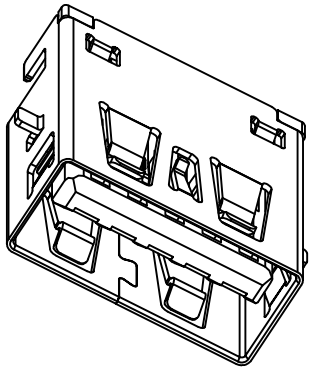

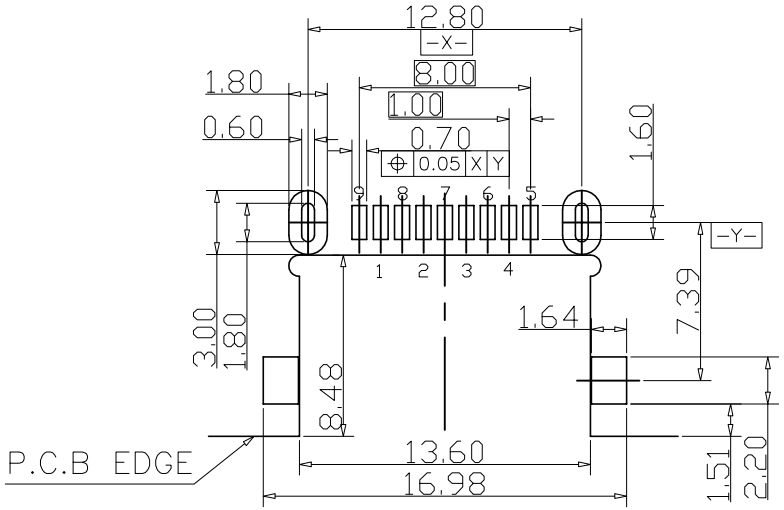

RECOMMEND P.C.B LAYOUT (THICKNESS 1.2mm)
(COMPONENT SIDE) TOLERANCE±0.05mm

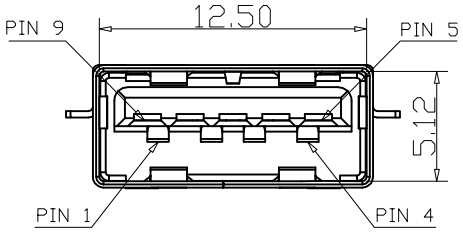

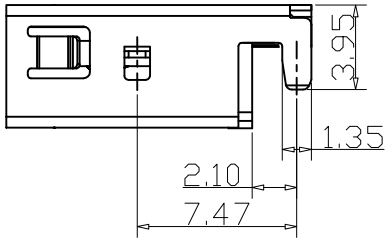

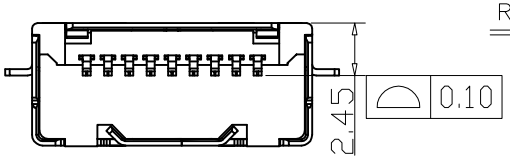

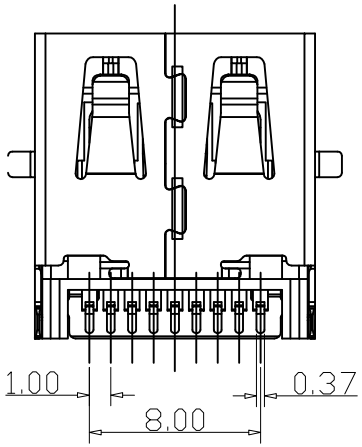

WLU3F9-09 8 X X X 060

PLATING:
1-G/F
2-AU 3U"
5-AU 15U"
6-AU 30U"

SHELL:
7-SN
9-NI

COLOUR:
A:Black
K:White
H:Purple
S:NATURE
G:BLUE

REMARK:
1. MATERIAL:
RUBBER CORE :(SEE DESCRIPTION OF MATERIAL NUMBER).
TERMINAL: C680R - SH;THICKNESS: 0.20 + / - 0.02 MM
SHELL: SUS.
2. PLATING:
TERMINAL: GOLD PLATED IN CONTACT AREA
(SEE DESCRIPTION OF MATERIAL NUMBER),
TIN PLATED IN SOLDER AREA 50U "MIN.
ENCLOSURE: NICKEL-PLATED 30U "MIN.
3.PACKAGE SPEC:REEL

REV.	REVISION RECORD	DATE
A0	NEW RELEASE	21.01.13

GENERAL TOLERANCES	
LINEAR	ANGLES
0.0±0.35	X°REF±6°
0.00±0.25	X°±3°
0.000±0.10	X°X' ±2°

UNIT: mm
SIZE: A4

SCALE: 1:1	NAME	DATE
APPROVED	Wang_jr	21.01.13
DESIGNER	Ding_bo	21.01.13
DRAWN	Ou_jian	21.01.13

PART.NO: WLU3F9-098XXX060

DWG.NO: ENDE05

TITLE: USB A TYPE CONN. H2.45

万连科技 WanLian Teconology Co., Ltd

REV: A0

SHEET: 1/1