The product using material and processing must conform to the "WL-PZ-001"HSF technical standard control requirements

RoHS

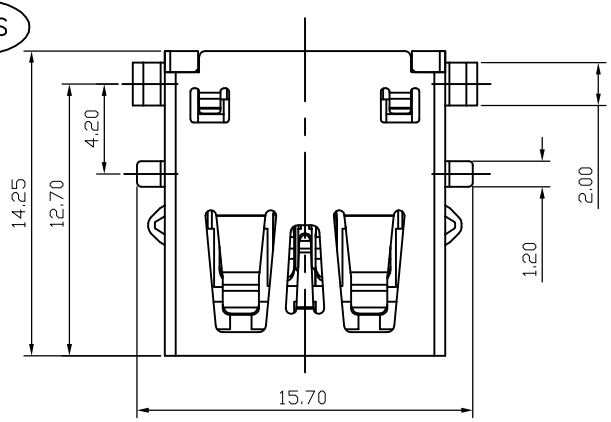

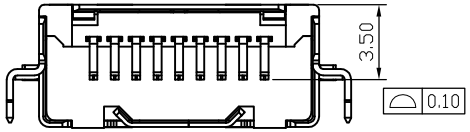

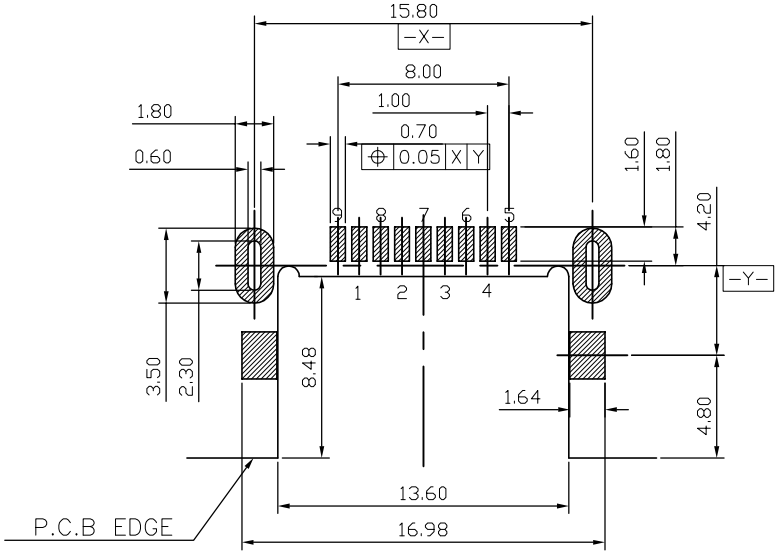

RECOMMEND P.C.B LAYOUT (THICKNESS 1.6mm)
(COMPONENT SIDE) TOLERANCE±0.05mm

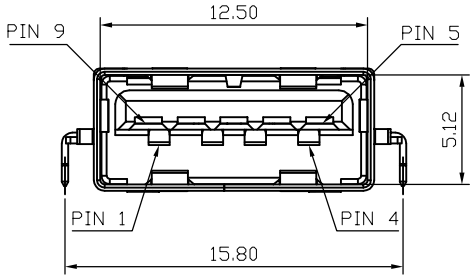

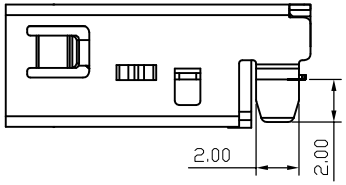

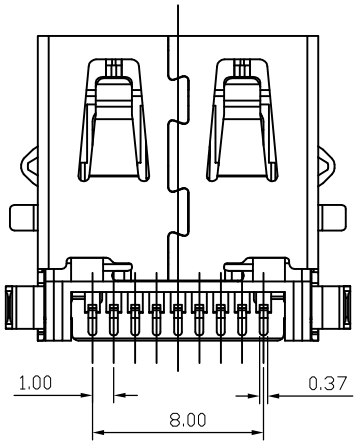

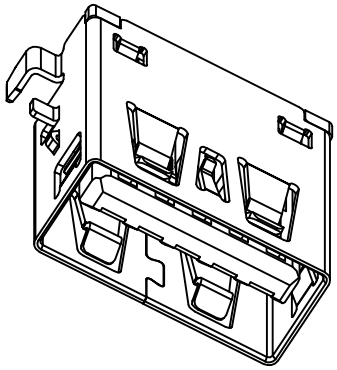

Remark:
1. Material:
Rubber core :(see description of material number).
Terminal: Copper Alloy.
Shell: SUS.
2. Plating:
Terminal: gold plated in contact area
(see description of material number),
tin plated in solder area 50U "MIN.
Enclosure: nickel-plated 30U "MIN.
3.PACKAGE SPEC:REEL

PART.NO.:
WLU3F9-09 8 X X X 059

PLATING:
1-G/F
2-Au 3u"
5-Au 15u"
6-Au 30u"

SHELL:
7-SN
9-NI

COLOUR:
A-BLACK
G-BLUE

REV.	REVISION RECORD	DATE
A0	NEW RELEASE	21.01.13

UNIT: mm
SIZE: A4

GENERAL TOLERANCES	
LINEAR	ANGLES
0.0±0.35	X°REF±6°
0.00±0.25	X°±3°
0.000±0.10	X°X' ±2°

SCALE: 1:1	NAME	DATE
APPROVED	Wang_jr	21.01.13
DESIGNER	Han_Gao	21.01.13
DRAWN	Zijun_Huang	21.01.13

PART.NO: WLU3F9-098XXX059

DWG.NO: ENDE05

TITLE: USB A TYPE CONN. H3.5

万连科技
WanLian Teconology Co., Ltd

REV: A0

SHEET: 1/1