The product using material and processing must conform to the "WI-PZ-142 "HSF technical standard control requirements

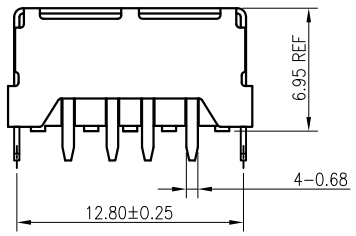

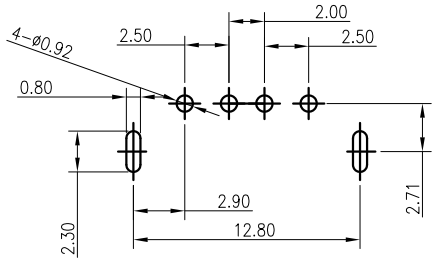

RECOMMENDED PCB LAYOUT(TOP VIEW)

GENERAL TOLERANCES:±0.05

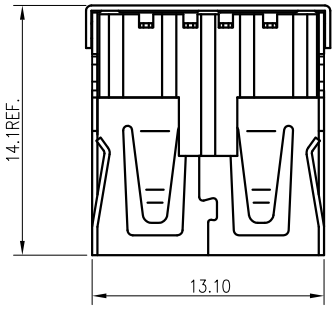

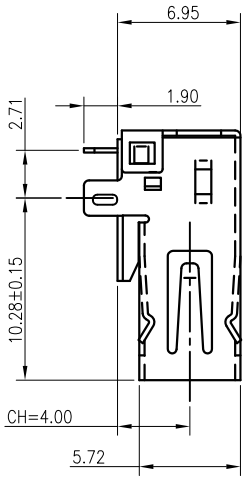

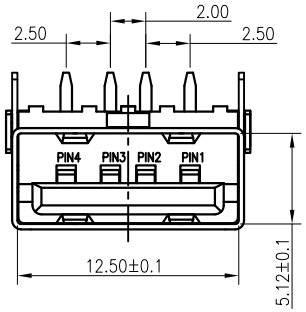

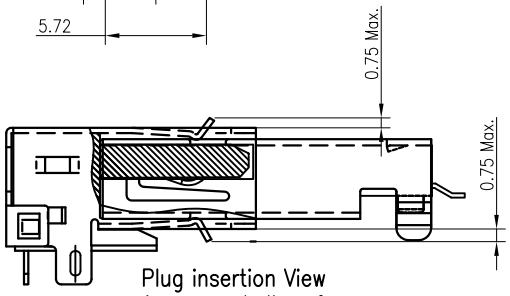

Plug insertion View
spring over shell surface

NOTE:
1.MATERIAL SPECIFICATION:
1-1.HOUSING:LCP BLACK UL94V-0
1-2.CONTACTS:COPPER ALLOY.
1-3.SHELL: SPCC.
2.PLATING SPECIFICATION:
2-1.CONTACTS:
Ni 50u" MIN. UNDER PLATED OVER ALL.
Au PLATED ON THE FUNCTIONAL AREA OF CONTACT.
2-2. SHELL:
Ni 30u" MIN. UNDER PLATED OVER ALL.
3.MECHANICAL PERFORMANCE:
3-1.INSERTION FORCE: 3.57kgf MAX
3-2.REMOVAL FORCE: 1.02kgf MIN
3-3.DURABILITY: 1500 CYCLES.
4.ELECTRICAL PERFORMANCE:
4-1.CURRENT RATING:1.5A
4-2.VOLTAGE RATING:30V MAX
4-3.Contact Resistance: 30m Ohm Max.
4-4.INSULATION RESISTANCE: 1000MΩ MIN
4-5.Dielectric Withstanding Voltage: 500V AC Min
5.ENVIRONMENTAL PERFORMANCE:
OPERATING TEMPERATURE: -20°C~+85°C.

WLU2F9-04 1 X X 01-019

PLATING:
1-G/F
2-AU 3U"
5-AU 15U"
6-AU 30U"

Colour:
A:Black
K:White

REV.	REVISION RECORD	DATE
A0	NEW RELEASE	21.01.13

GENERAL TOLERANCES	
LINEAR	ANGLES
0.0±0.35	X° REF±6°
0.00±0.25	X° ±3°
0.000±0.10	X° X'±2°

UNIT: mm

SIZE: A4

SCALE: 1:1	NAME	DATE
APPROVED	Wang_jr	21.01.13
DESIGNER	Ding_bo	21.01.13
DRAWN	Ou_jian	21.01.13

PART.NO: WLU2F9-041XX01-019

DWG.NO: ENDE05

TITLE: USB2.0 AF 单层 90度插板 无边

万连科技 WanLian Teconology Co., Ltd

REV: A0

SHEET: 1/1