The product using material and processing must conform to the "WI-PZ-001"HSF technical standard control requirements

RoHS

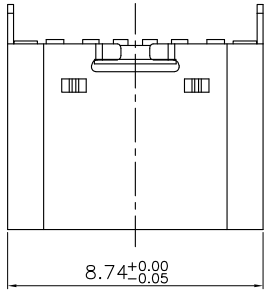

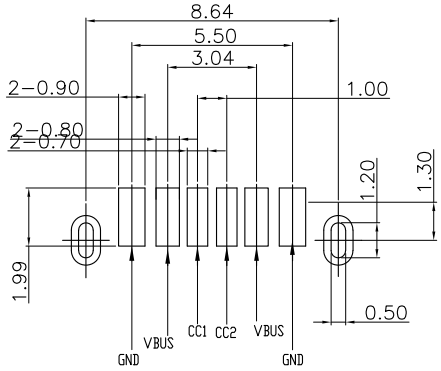

RECOMMENDED P.C.B. LAYOUT

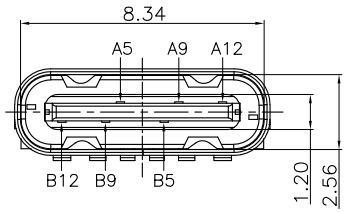

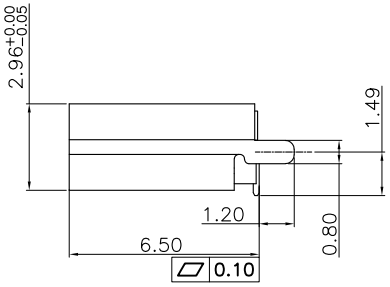

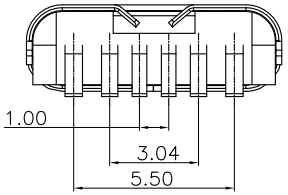

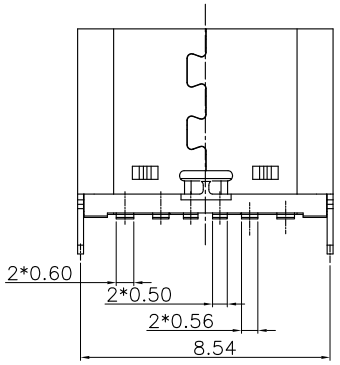

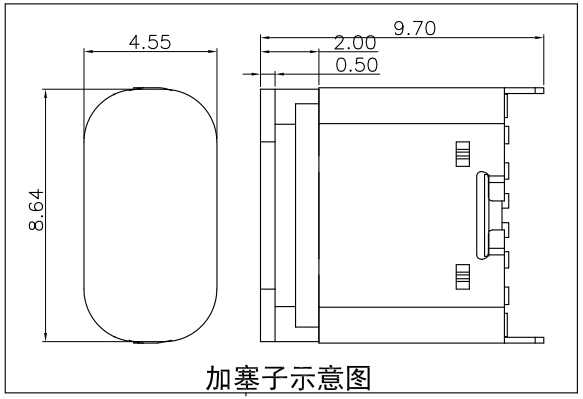

加塞子示意图

NOTE:
1.MATERIAL SPECIFICATION:
1-1.HOUSING:LCP BLACK UL94 V-0
1-2.CONTACTS:COPPER ALLOY
1-3.MID PLATE: STAINLESS STEEL
1-4.SHELL: STAINLESS STEEL
2.PLATING SPECIFICATION:
2-1.CONTACTS:
Ni 50u" MIN. UNDER PLATED OVER ALL.
Au PLATED ON THE FUNCTIONAL AREA OF CONTACT.
2-2.MID PLATE:
CLEAR ONLY
2-3.FRONT SHELL:
Ni 30u" MIN. UNDER PLATED OVER ALL.
3.MECHANICAL PERFORMANCE:
3-1.INSERTION FORCE: 0.5~2.0kgf.
3-2.REMOVAL FORCE: 0.8kgf~2.0kgf.
3-3.DURABILITY: 10000 CYCLES.
4.ELECTRICAL PERFORMANCE:
4-1. CURRENT RATING:3.0A
VOLTAGE RATING:20V MAX
4-2. LLCR:
VBUS & GND PINS AND OTHER PINS: 40mΩ/PIN MAX.
SHIELD: 50mΩ/MAX.
LLCR MAX. CHANGE OF ALL PINS: 10mΩ.
4-3.INSULATION RESISTANCE: 100MΩ MIN
4-4.WITHSTANDING VOLTAGE: 100V AC R.M.S.
5.ENVIRONMENTAL PERFORMANCE:
OPERATING TEMPERATURE: -25°C~+85°C.

WLT2F0-06 2 X X 0002

PLATING:
1-G/F
2-AU 3U"
5-AU15U"
6-AU30U"

Colour:
A:Black
K:White

REV.	REVISION RECORD	DATE
A0	NEW RELEASE	21.01.13

GENERAL TOLERANCES	
LINEAR	ANGLES
0.0±0.35	X° REF±6°
0.00±0.25	X° ±3°
0.000±0.10	X° X'±2°

UNIT: mm
SIZE: A4

SCALE: 1:1	NAME	DATE
APPROVED	Wang_jr	21.01.13
DESIGNER	Ding_bo	21.01.13
DRAWN	Ou_jian	21.01.13

PART.NO: WLT2F0-062XX0002

DWG.NO: ENDE05

TITLE: TYPE C 6P/F 立贴 短体6.5

万连科技 WanLian Teconology Co., Ltd

REV: A0 SHEET: 1/1