The product using material and processing must conform to the "WL-PZ-001"HSF technical standard control requirements

RoHS

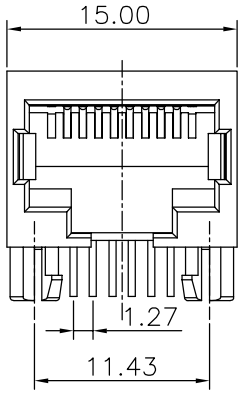

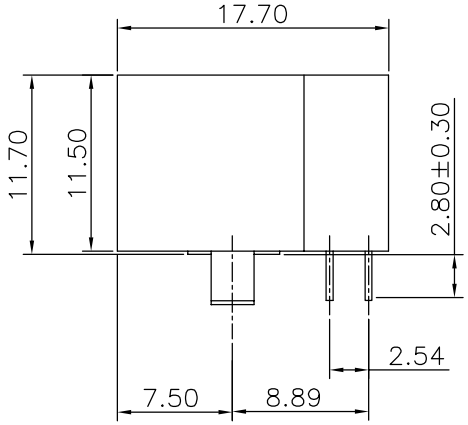

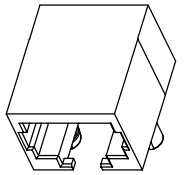

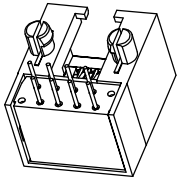

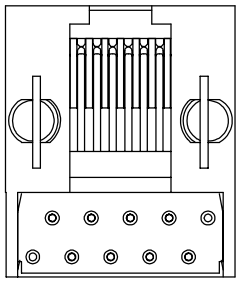

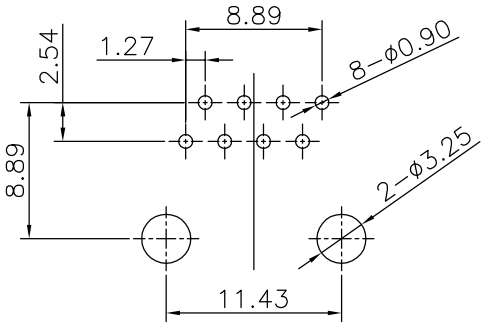

PCB LAYOUT

NOTE:
1.MATERIAL SPECIFICATION:
1-1.HOUSING: PBT UL94V-0
1-2.CONTACT: PHOSPHOR BRONZE φ0.46
2.PLATING SPECIFICATION:
G/F PLATING OVER Ni
3.MECHANICAL PERFORMANCE:
3-1.INSERTION FORCE: 22N MAX
3-2.REMOVAL FORCE: 22N MAX
3-2.DURABILITY: 750 CYCLES MIN.
4.ELECTRICAL PERFORMANCE:
4-1.CURRENT RATING:1.5A
4-2.VOLTAGE RATING:125V MAX
4-3.CONTACT RESISTANCE: 40mΩ Max.
4-4.INSULATION RESISTANCE: 500MΩ MIN
4-5.DIELECTRIC WITHSTANDING VOLTAGE: 500V AC Min
5.ENVIRONMENTAL PERFORMANCE:
OPERATING TEMPERATURE: -40°C~+85°C.
6.PACKAGE SPEC:TRAY

P/N:
WLR4F9-08 1 X X X 012

PLATING:
1-G/F
2-Au 3u"
3-Au 6u"
5-Au 15u"
6-Au 30u"

HOUSING:
1-PBT
2-LCP
3-PA9T
4-PA46
5-PA66

COLOUR:
A-BLACK
D-ORANGE
E-YELLOW
G-BLUE
J-GRAY

REV.	REVISION RECORD	DATE
A0	NEW RELEASE	21.01.13

UNIT: mm
SIZE: A4

GENERAL TOLERANCES	
LINEAR	ANGLES
0.0±0.35	X°REF±6°
0.00±0.25	X°±3°
0.000±0.10	X°X' ±2°

SCALE: 1:1	NAME	DATE
APPROVED	Wang_jr	21.01.13
DESIGNER	Han_Gao	21.01.13
DRAWN	Zijun_Huang	21.01.13

PART.NO: WLR4F9-081XXX012

DWG.NO: ENDE05

TITLE: RJ45 8P8C DIP

万连科技
WanLian Teconology Co., Ltd

REV: A0 SHEET: 1/1