The product using material and processing must conform to the "WI-PZ-142"HSF technical standard control requirements

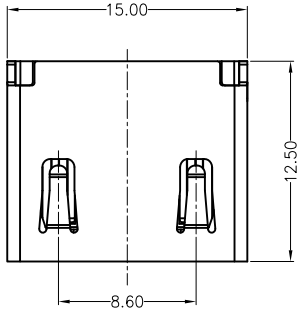

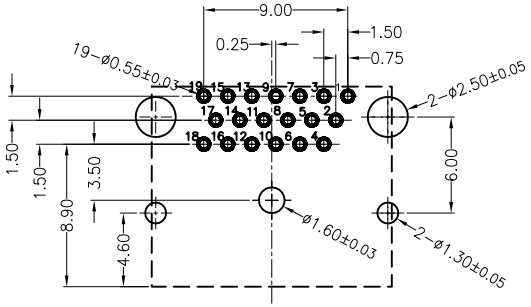

RECOMMENDED PCB LAYOUT

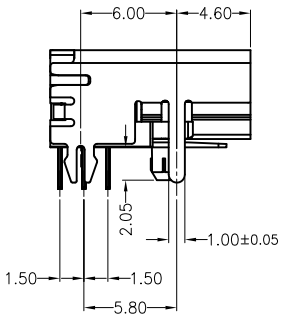

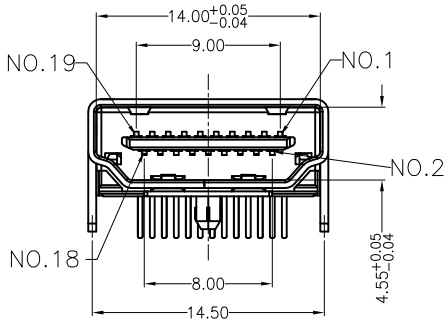

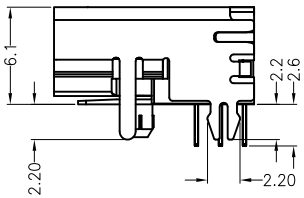

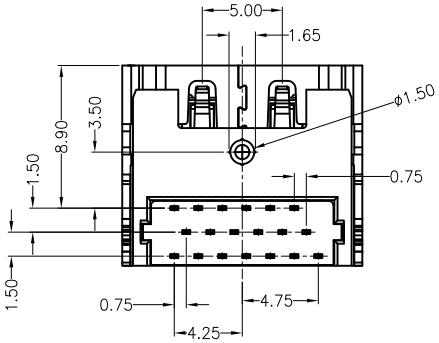

NOTE:
1.MATERIAL SPECIFICATION:
1-1.HOUSING:LCP BLACK UL94 V-0.
1-2.CONTACTS:BRASS,C2680R-H.
1-3.SHELL: BRASS,C2680R-H.
2.PLATING SPECIFICATION:
2-1.CONTACTS:
Ni 50u" MIN. UNDER PLATED OVER ALL.
15U" PLATED ON THE FUNCTIONAL AREA OF CONTACT.
2-2. SHELL:
Ni 30u" MIN. UNDER PLATED OVER ALL.
3.MECHANICAL PERFORMANCE:
3-1.INSERTION FORCE: 4.5kgf MAX
3-2.REMOVAL FORCE: 1.0kgf MIN
3-3.DURABILITY: 10000 CYCLES.
4.ELECTRICAL PERFORMANCE:
4-1.CURRENT RATING:0.5A
4-2.VOLTAGE RATING:40V MAX
4-3.Contact Resistance: 30m Ohm Max.
4-4.INSULATION RESISTANCE: 100MΩ MIN
4-5.Dielectric Withstanding Voltage: 500V AC Min
5.ENVIRONMENTAL PERFORMANCE:
OPERATING TEMPERATURE: -20°C~+85°C.

WLHDF9-19 1 X X 03-007

PLATING:
1—G/F
2—AU 3U"
5—AU 15U"
6—AU 30U"

Colour:
A:Black
K:White

REV.	REVISION RECORD	DATE
A0	NEW RELEASE	21.01.13

UNIT: mm
SIZE: A4

GENERAL TOLERANCES	
LINEAR	ANGLES
0.0±0.35	X° REF±6°
0.00±0.25	X° ±3°
0.000±0.10	X° X'±2°

SCALE: 1:1	NAME	DATE
APPROVED	Wang_jr	21.01.13
DESIGNER	Ding_bo	21.01.13
DRAWN	Ou_jian	21.01.13

PART.NO: WLHDF9-191XX03-007

DWG.NO: ENDE05

万连科技
WanLian Teconology Co., Ltd

TITLE: HDMI A TYPE Female三排 DIP 四脚插板鱼叉脚

REV: A0

SHEET: 1/1