The product using material and processing must conform to the "WI-PZ-001 "HSF technical standard control requirements

RoHS

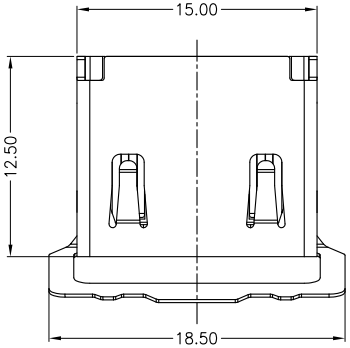

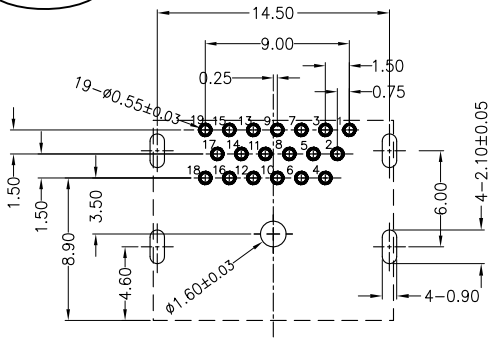

RECOMMENDED PCB LAYOUT (TOP VIEW)

GENERAL TOLERANCES:±0.03 (t=1.6)

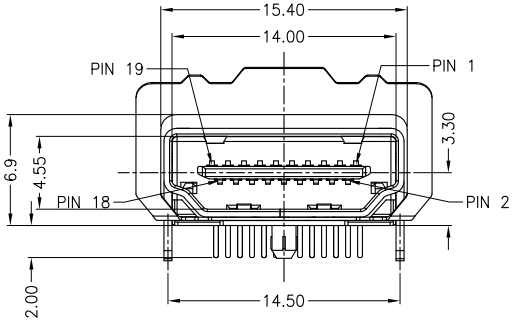

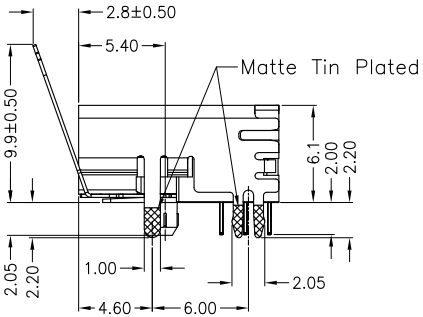

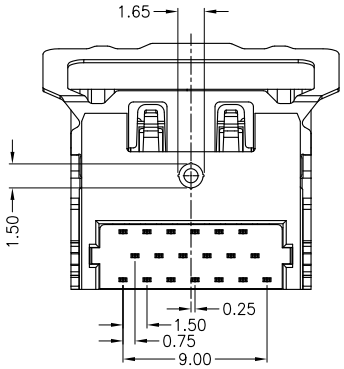

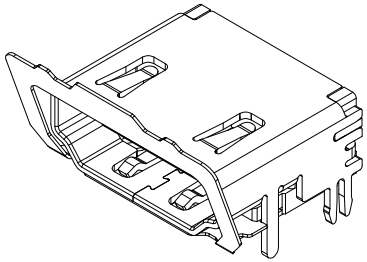

NOTE:

1.MATERIAL SPECIFICATION:
- 1-1.HOUSING:LCP BLACK UL94 V-0.
- 1-2.CONTACTS:PHOSPHOR BRONZE.
- 1-3.SHELL: BRASS.

2.PLATING SPECIFICATION:
- 2-1.CONTACTS:
  Ni 50u" MIN. UNDER PLATED OVER ALL.
  Au15U" PLATED ON THE FUNCTIONAL AREA OF CONTACT.
- 2-2. SHELL:
  Ni 30u" MIN. UNDER PLATED OVER ALL.

3.MECHANICAL PERFORMANCE:
- 3-1.INSERTION FORCE: 4.5kgf MAX
- 3-2.REMOVAL FORCE: 1.0kgf MIN
- 3-3.DURABILITY: 10000 CYCLES.

4.ELECTRICAL PERFORMANCE:
- 4-1.CURRENT RATING:0.5A
- 4-2.VOLTAGE RATING:40V MAX
- 4-3.Contact Resistance: 30m Ohm Max.
- 4-4.INSULATION RESISTANCE: 100MΩ MIN
- 4-5.Dielectric Withstanding Voltage: 500V AC Min

5.ENVIRONMENTAL PERFORMANCE:
- OPERATING TEMPERATURE: -20°C~+85°C.

6.PACKAGE SPEC:REEL

WLHDF9-19 1 X X 0011

PLATING:
- 1-G/F
- 2-AU 3U"
- 5-AU 15U"
- 6-AU 30U"

COLOUR:
- A:BLACK
- K:WHITE

REV.	REVISION RECORD	DATE
A0	NEW RELEASE	21.01.13

GENERAL TOLERANCES	
LINEAR	ANGLES
0.0±0.35	X°REF±6°
0.00±0.25	X°±3°
0.000±0.10	X°X' ±2°

UNIT: mm

SIZE: A4

SCALE: 1:1	NAME	DATE
APPROVED	Wang_jr	21.01.13
DESIGNER	Ding_bo	21.01.13
DRAWN	Ou_jian	21.01.13

PART.NO: WLHDF9-191XX0011

DWG.NO: ENDE05

TITLE: HDMI A TYPE Female三排 DIP 四脚插板

万连科技 WanLian Teconology Co., Ltd

REV: A0

SHEET: 1/1