The product using material and processing must conform to the "WI-PZ-001"HSF technical standard control requirements

RoHS

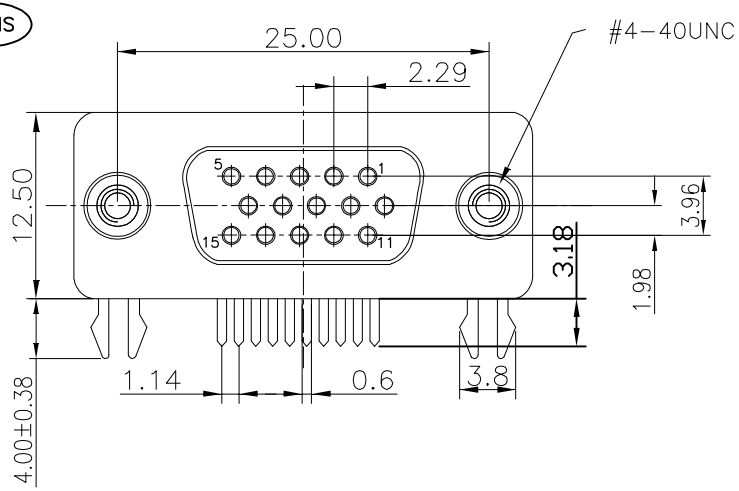


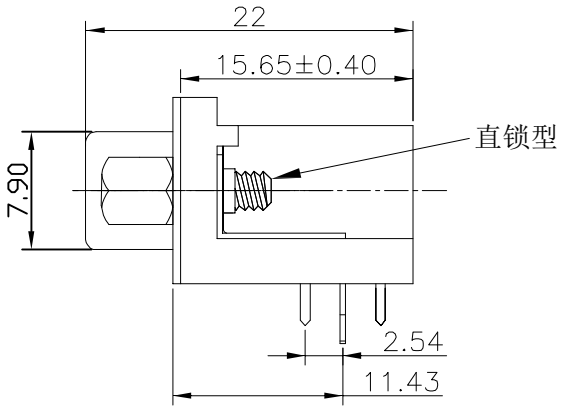


NOTE:
1.MATERIAL:
- 1.1 HOUSING:PBT+30%GF, UL94V-0, COLOR:BLUE.
- 1.2 TERMINAL:COPPER ALLOY.
- 1.3 SHELL:SPCC
- 1.4 HARPOON:SPCC
- 1.5 SCREW:SPCC

2. PLATING:
- 2.1 CONTACT: 80u" Min.MATTE TIN NICKEL PLATED OVERALL 50u" Min. NICKEL UNDER-PLATED
- 2.2 SHELL:50u" Min, NICKEL PLATED OVERALL
- 2.3 HARPOON:50u" Min, TIN PLATED OVERALL.
- 2.4 SCREW:50u" Min, NICKEL PLATED OVERALL.

3. SPECIFICATIONS:
- VOLTAGE: 250 VAC(RMS) MAX.
- CURRENT RATING: 3 AMPERE PER CONTACT
- CONTACT RESISTANCE: 25 MILLIOHMS MAX.
- INSULATION RESISTANCE: 5000 MEGOHMS MIN.
- DIELECTRIC WITHSTANDING VOLTAGE: 1000V AC(RMS)
- MATING FORCE: 5.1Kg.Max.
- UNMATING FORCE: 1.0Kg.MIN
- OPERATING TEMPEROTURE:-25°C ~ +85°C

P/N:WLDBF9-15 1 X X 0 144

PLATING: 7-Sn

COLOUR: G-BLUE

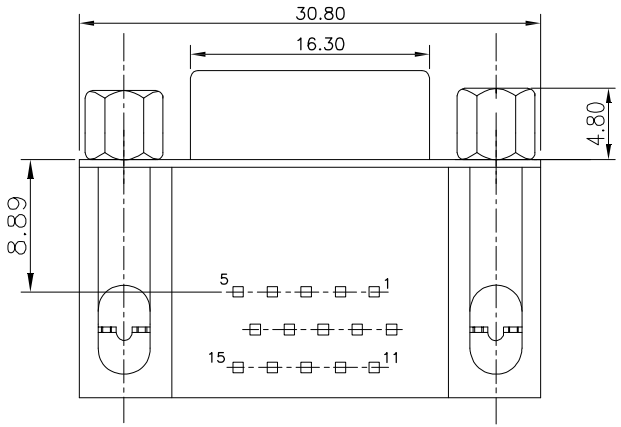


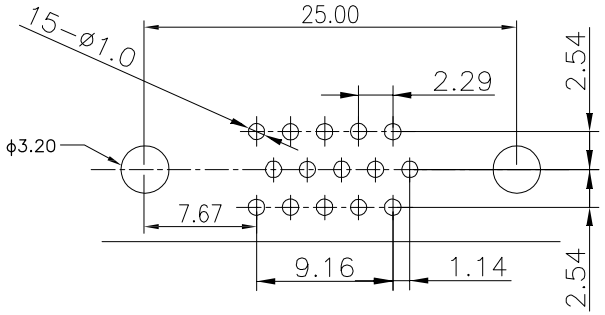


PCB Holes Diagram(Top View)

| REV. | REVISION RECORD | DATE |
|---|---|---|
| A0 | NEW RELEASE | 21.01.13 |

| GENERAL TOLERANCES | |
|---|---|
| LINEAR | ANGLES |
| 0.0±0.35 | X°REF±6° |
| 0.00±0.25 | X°±3° |
| 0.000±0.10 | X°X' ±2° |

UNIT: mm

SIZE: A4

| SCALE: 1:1 | NAME | DATE |
|---|---|---|
| APPROVED | Wang_jr | 21.01.13 |
| DESIGNER | Han_Gao | 21.01.13 |
| DRAWN | Zijun_Huang | 21.01.13 |

PART.NO: WLDBF9-151XX0144

DWG.NO: ENDE05

TITLE: HDR8.89 15F 90°DIP

万连科技 WanLian Teconology Co., Ltd

REV: A0

SHEET: 1/1