The product using material and processing must conform to the "WI-PZ-001"HSF technical standard control requirements

RoHS

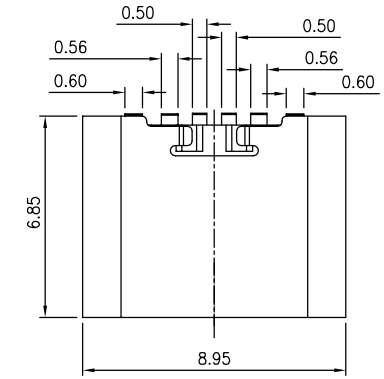

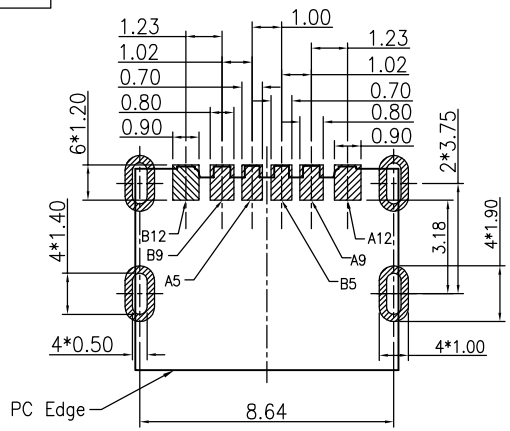

RECOMMENDED P.C.B. LAYOUT
TOLERANCE UNSPECIFIED ±0.05mm

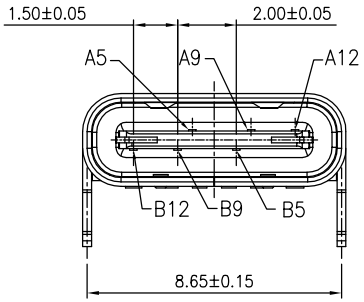

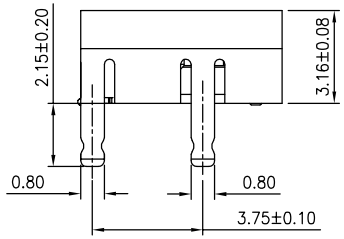

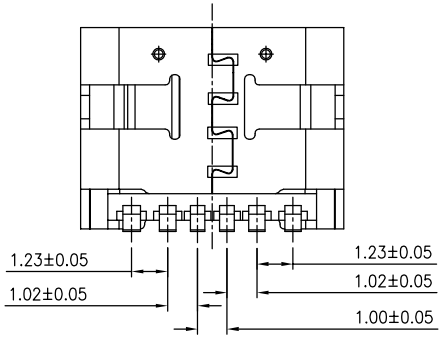

PIN	SIGNAL NAME
B12	GND
B9	VBUS
B5	CC2
A5	CC1
A9	VBUS
A12	GND

NOTE:
1.MATERIAL SPECIFICATION:
1-1.HOUSING:LCP,UL94 V-0.
1-2.CONTACTS:COPPER ALLOY
1-3.FRONT SHELL: STAINLESS STEEL

2.PLATING SPECIFICATION:
2-1.CONTACTS:
Ni UNDER PLATED OVER ALL.
G/F PLATED ON THE FUNCTIONAL AREA OF CONTACT.
2-2.FRONT SHELL:Ni UNDER PLATED OVER ALL.

3.MECHANICAL PERFORMANCE,
3-1.INSERTION FORCE: 0.5~2.0kgf.
3-2.REMOVAL FORCE: 0.8~2.0kgf.
3-3.DURABILITY: 10000 CYCLES.

4.ELECTRICAL PERFORMANCE,
4-1. CURRENT RATING:5.0A
VOLTAGE RATING:5.0V
4-2. LLCR:
VBUS & GND PINS AND OTHER PINS: 40mΩ/PIN MAX.
SHIELD: 50mΩ/MAX.
LLCR MAX. CHANGE OF ALL PINS: 10mΩ.
4-3.INSULATION RESISTANCE: 100MΩ MIN
4-4.DIELECTRIC WITHSTAND VOLTAGE,AC 100V FOR 1 MINUTE.

5. ENVIRONMENTAL PERFORMANCE:
OPERATING TEMPERATURE: -25°C~+85°C.

6.IR REFLOW:
THE PEAK TEMPERATURE ON THE BOARD SHALL BE MAINTAINED FOR 10 SECONDS AT 260°C.

REV.	REVISION RECORD	DATE
A0	NEW RELEASE	21.11.17
A1	ECN20230613002	23.06.13

UNIT: mm
SIZE: A4

GENERAL TOLERANCES	
LINEAR	ANGLES
0.0±0.35	X°REF±6°
0.00±0.25	X°±3°
0.000±0.10	X°X' ±2°

SCALE: 1:1	NAME	DATE
APPROVED	Wang_jr	21.11.17
DESIGNER	Han_Gao	21.11.17
DRAWN	Zijun_Huang	21.11.17

PART.NO: WLT2F9-0621A9291

DWG.NO: ENDE05

TITLE: TYPE C 6P Female R/A SMT

万连科技
WanLian Technology Co., Ltd

REV: A1

SHEET: 1/1