The product using material and processing must conform to the "WL-PZ-001"HSF technical standard control requirements

芯数	2	3	4	5	6	8	12
图形	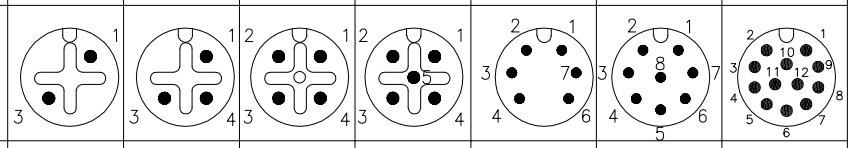						
Rated Current(A)	4	4	4	4	2	2	1
Rated Voltage(V)	250	250	250	60	30	30	30
Insulation Resistance(MΩ)	≥100	≥100	≥100	≥100	≥100	≥100	≥100
Contact Resistance(MΩ)	≤5	≤5	≤5	≤5	≤5	≤5	≤5

Insulator Coded

Coded	A	B	D
Pin Number		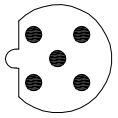	

Technical Characteristics

1. Durability: >500 mate/unmate cycles
2. Rated Temperature: -40℃, +80℃
3. Waterproof: IP67
4. Connection mode: threaded connection
5. Connection mode: Screw crimping
6. Pollution level: 3
7. Cable diameter: 4~7MM,7~9MM

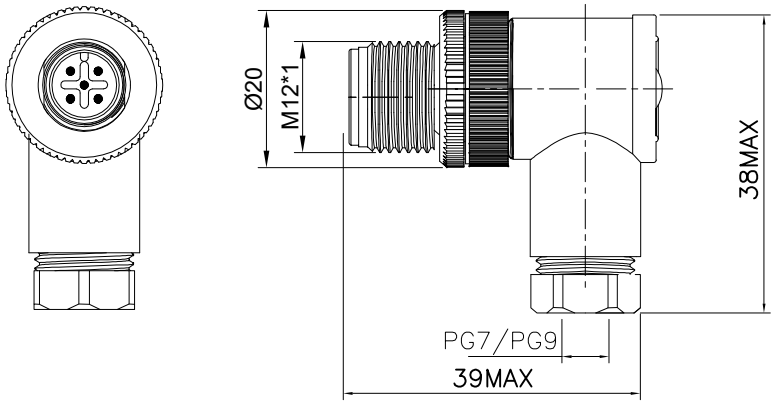

Material specification

No.	Specification	Material	Treat	Unit	Q'ty
5	Body	PA	BLACK	Pcs	1
4	PIN	Copper	G/F	Pcs	2~12
3	Screw Cap	Brass	Nickel plated	Pcs	1
2	O-RING	Rubber	/	Pcs	1
1	Insulator	PA	BLACK	Pcs	1

REV.	REVISION RECORD	DATE
A0	NEW RELEASE	

UNIT: mm
SIZE: A4

GENERAL TOLERANCES	
LINEAR	ANGLES
0.0±0.35	X°REF±6°
0.00±0.25	X°±3°
0.000±0.10	X°X' ±2°

SCALE: 1:1	NAME	DATE
APPROVED		
DESIGNER		
DRAWN		

PART.NO: M12XXX-01-011

DWG.NO: ENDE05

TITLE: M12 assembled male bend plug PG7/PG9

WanLian Technology Co., Ltd

REV: A0 SHEET: 1/1